KYOSHO INFERNO MP-7.5 NITROCROSS

WWW.NITROCROSS.COM

TRACK

EVENT INFORMATION	
DRIVER	
DATE	
EVENT	
TRACK	
LOCATION	
MISC	

LAP INFORMATION	
FASTEST LAP	
QUALIFYING	
MAIN	
TQ TIME	

TRACK CONDITIONS	
SURFACE	
TEMP	
WEATHER	
WATER	
MISC	

TRACK LAYOUT	
DIMENSIONS	

FRONT

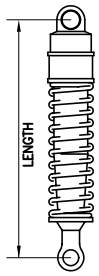

SHOCKS		
SHAFT SIZE	3.0	3.5
PISTON	1.2ø x 2 1.3ø x 2	
DRILLED __ø x __	1.4ø x 2 1.6ø x 1	
OIL	WT	
SPRING		
PRELOAD	MM	

SUSPENSION		
UPPER	A	B
LOWER	A	B
HUB CASTER	17° 20° 22°	
TOE IN/OUT		
CAMBER		

SHOCK POSITION		
UPPER		
LOWER	INSIDE	OUTSIDE
NOTES		

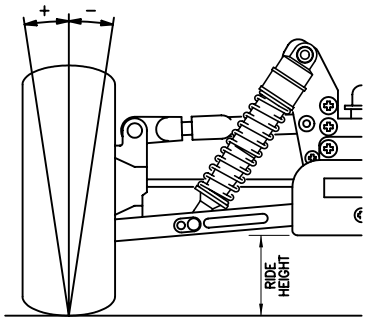

REAR

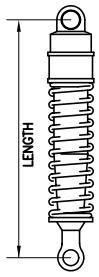

SHOCKS		
SHAFT SIZE	3.0	3.5
PISTON	1.2ø x 2 1.3ø x 2	
DRILLED __ø x __	1.4ø x 2 1.6ø x 1	
OIL	WT	
SPRING		
PRELOAD	MM	

SUSPENSION			
PLATE	1°	2°	3°
HOLDER	1°	2°	3°
WHEELBASE	F MM R MM		
HUB MOUNT	UPPER LOWER		
CAMBER			

SHOCK POSITION		
UPPER		
LOWER	INSIDE	OUTSIDE

CAMBER LINKAGE

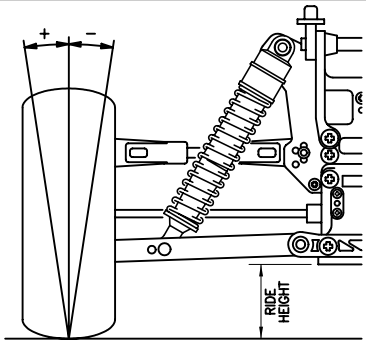

TRAIN

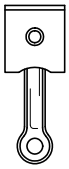

ENGINE	
ENGINE	
PLUG	
FUEL	
AVERAGE TEMP	
SPUR	T

CLUTCH		
MAKE		
STYLE	2pc	3pc
MATERIAL		
SPRINGS		
CLUTCH BELL	T	

EXHAUST		
MAKE		
MODEL		
STYLE	1pc	2pc
MATERIAL		
ADAPTER		

DIFFERENTIAL SETUPS					
FRONT		CENTER		REAR	
STD	LSD	STD	LSD	STD	LSD
BLK	RED	BLK	RED	BLK	RED
WT		WT		WT	
TORSEN		TORSEN		TORSEN	

DRIVE

TIRES	
MAKE	
MODEL	
COMPOUND	
FOAM	S M H
TRIMMED	

CLUTCH SHOE MODS	
2 SHOE	3 SHOE

SWAY BAR		
FRONT	ø	mm
REAR	ø	mm

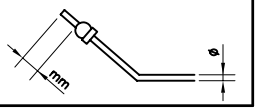

STEERING

MISCELLANEOUS		
BRAKE PADS		
BRAKE BIAS	F %	R %
FUEL FILTER	1	2
WING	UPPER LOWER	

NOTES